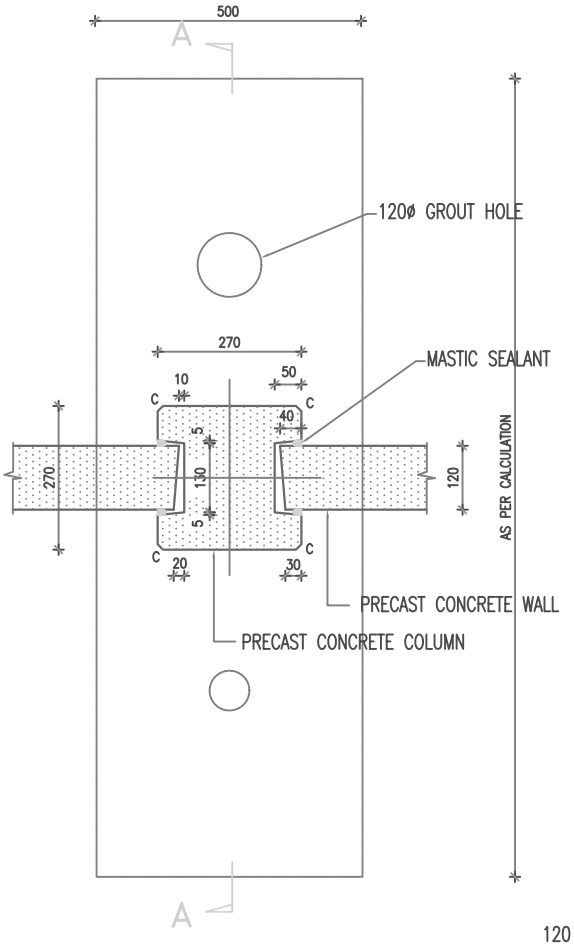

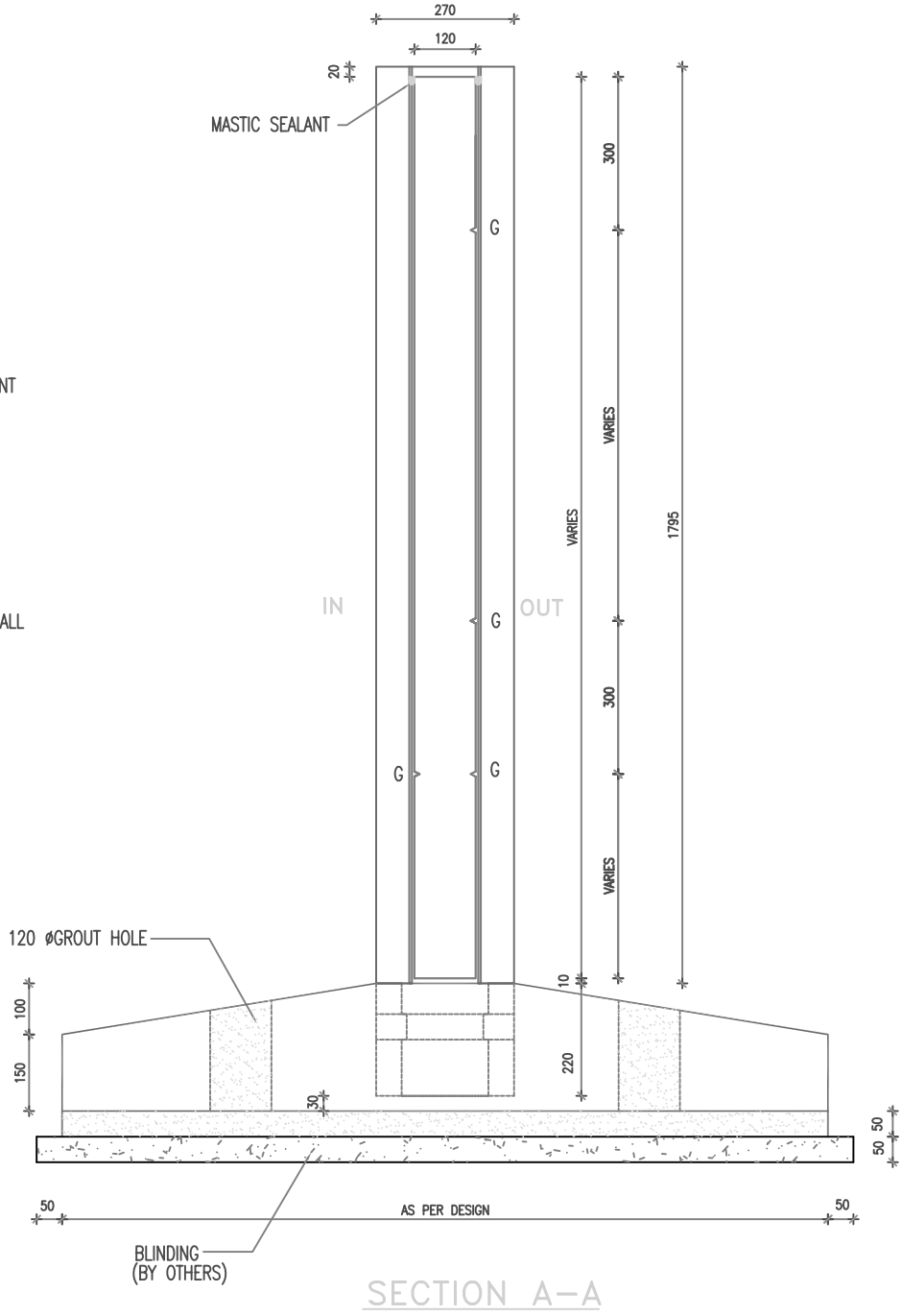

SECTION A–A

BOUNDRY WALL TYPE–1